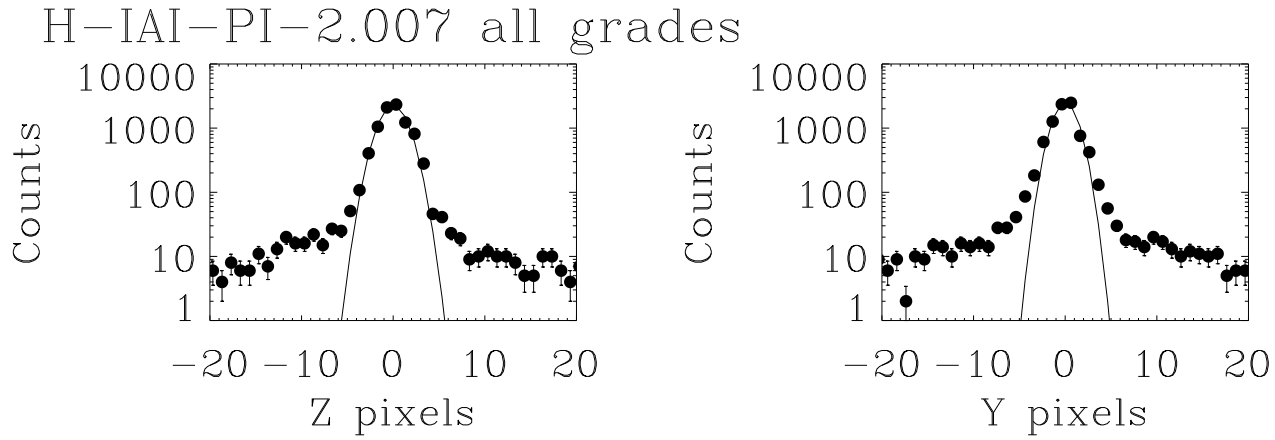

All measurements in pixels

Z gaussian FWHM = 3.3774309

Y gaussian FWHM = 2.8802863

Z fit parameters: Amplitude= 2281 Offset= 49 Sigma= 1

Y fit parameters: Amplitude= 2561 Offset= 49 Sigma= 1

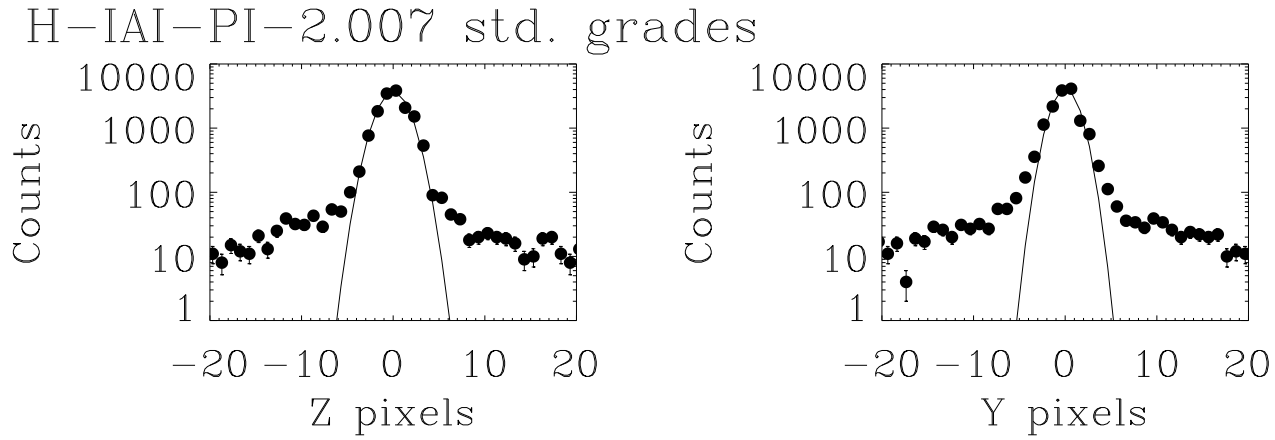

All measurements in pixels

Z gaussian FWHM = 3.5893200

Y gaussian FWHM = 3.0516797

Z fit parameters: Amplitude= 3710 Offset= 49 Sigma= 1

Y fit parameters: Amplitude= 4149 Offset= 49 Sigma= 1

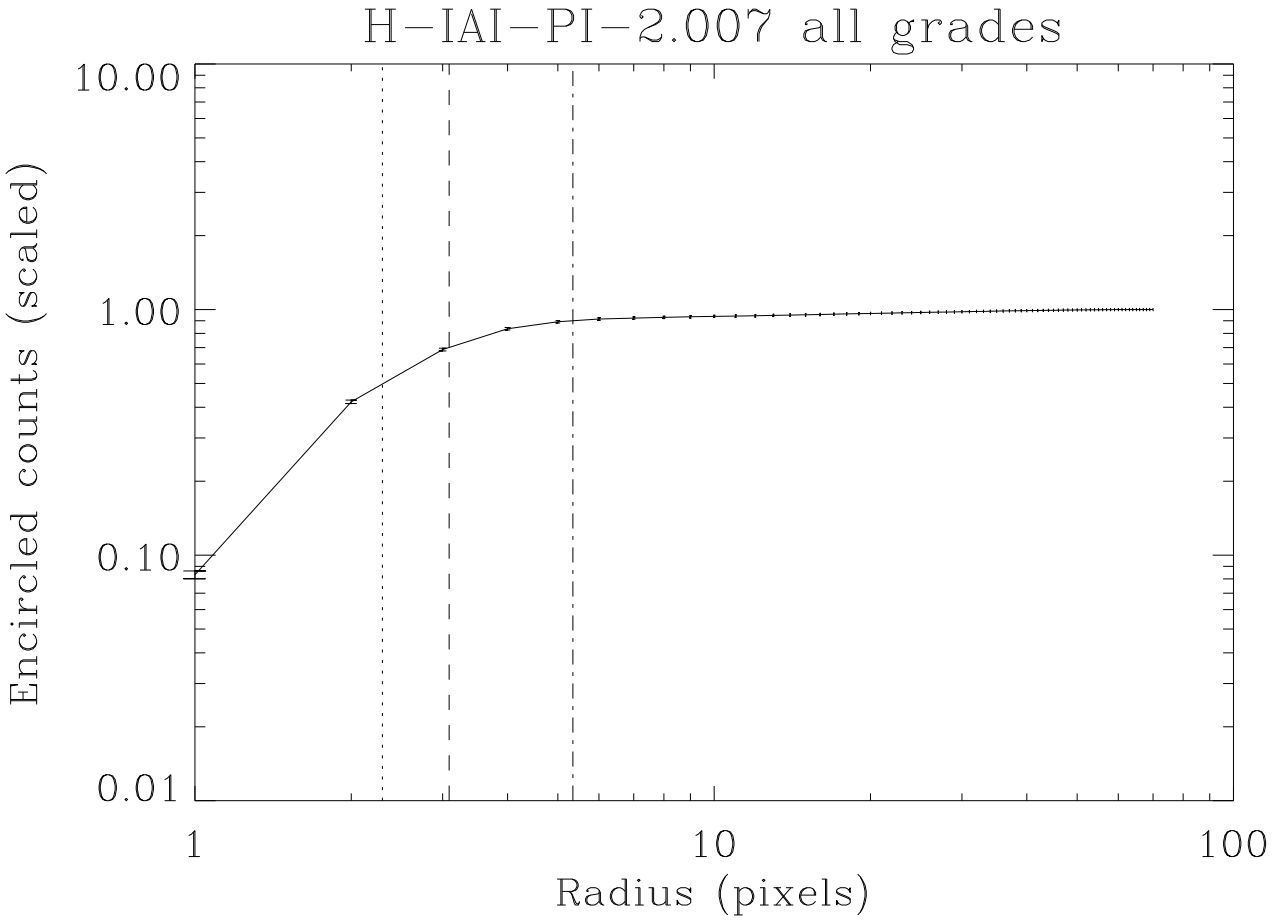

Encircled energy radii in pixels

50% radius =2.29652

70% radius =3.08706

90% radius =5.34417

Encircled energy radii in microns

50% radius =55.1165

70% radius =74.0894

90% radius =128.260

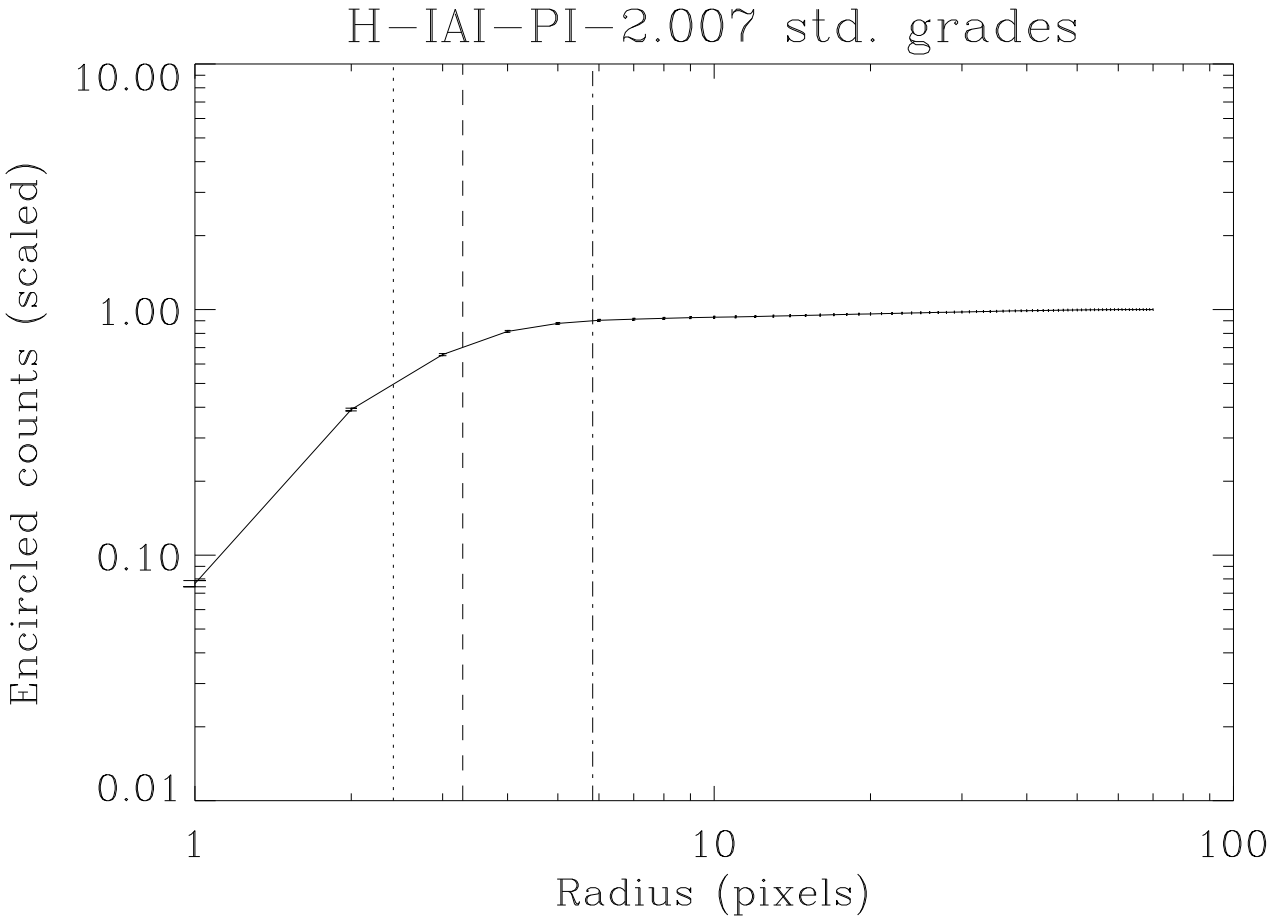

Encircled energy radii in pixels

50% radius =2.41068

70% radius =3.27942

90% radius =5.83407

Encircled energy radii in microns

50% radius =57.8563

70% radius =78.7062

90% radius =140.018

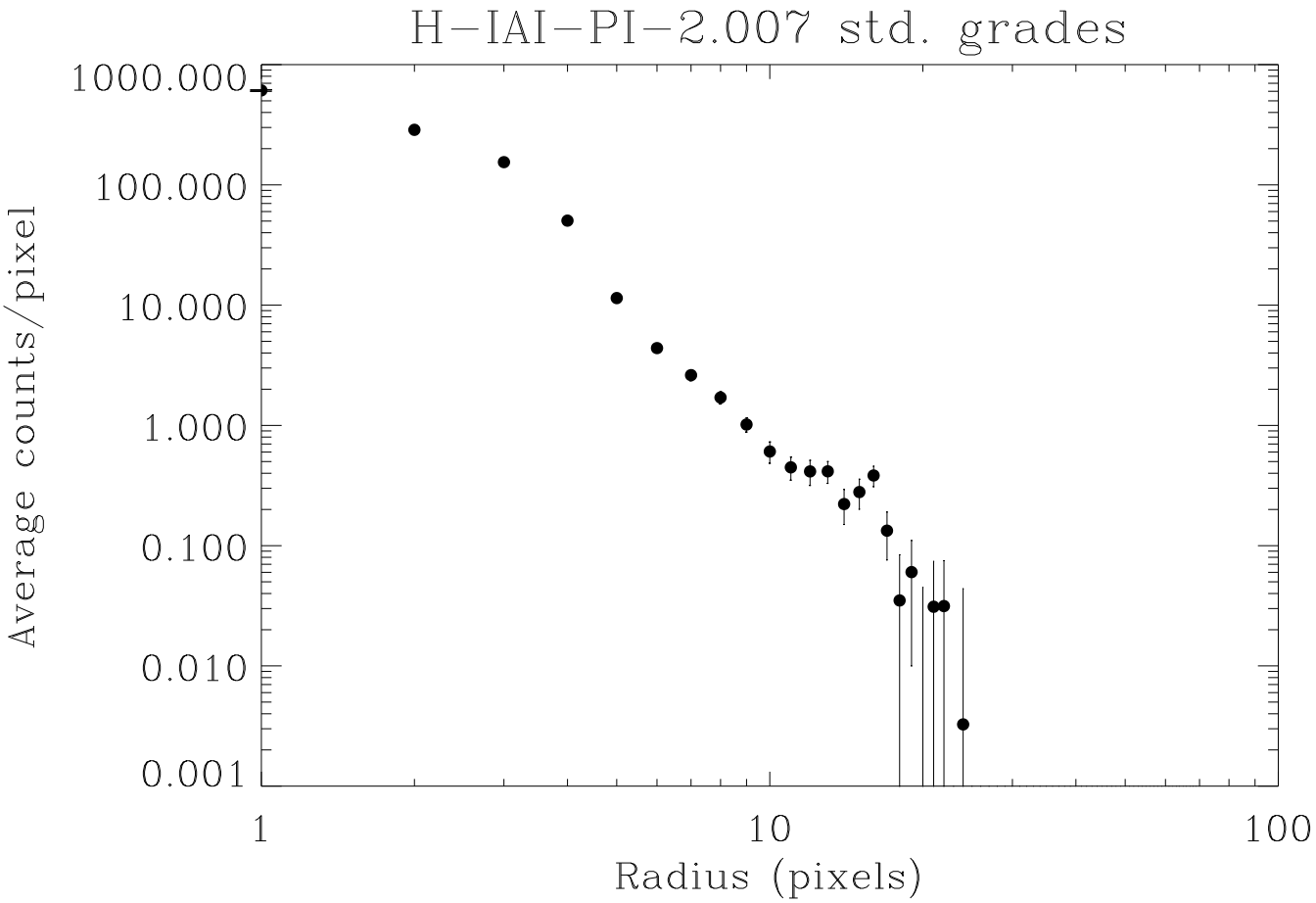
H−IAI−PI−2.007 std. grades
1000.000
100.000
10.000
1.000
0.100
0.010
0.001
Average counts/pixel
1
10
100
Radius (pixels)

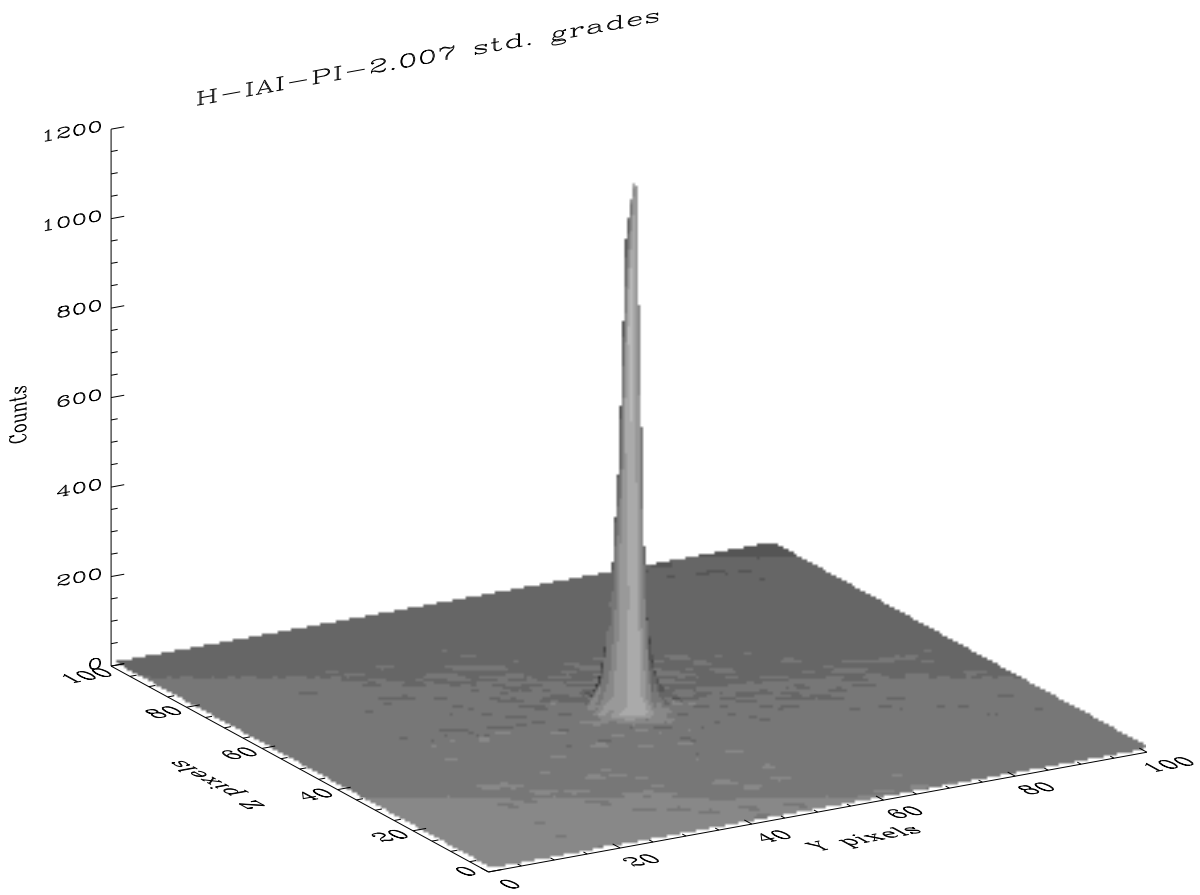
H−IAI−PI−2.007 std. grades
Counts
1200
1000
800
600
400
200
0
Z pixels
100
80
60
40
20
0
Y pixels
0
20
40
60
80
100

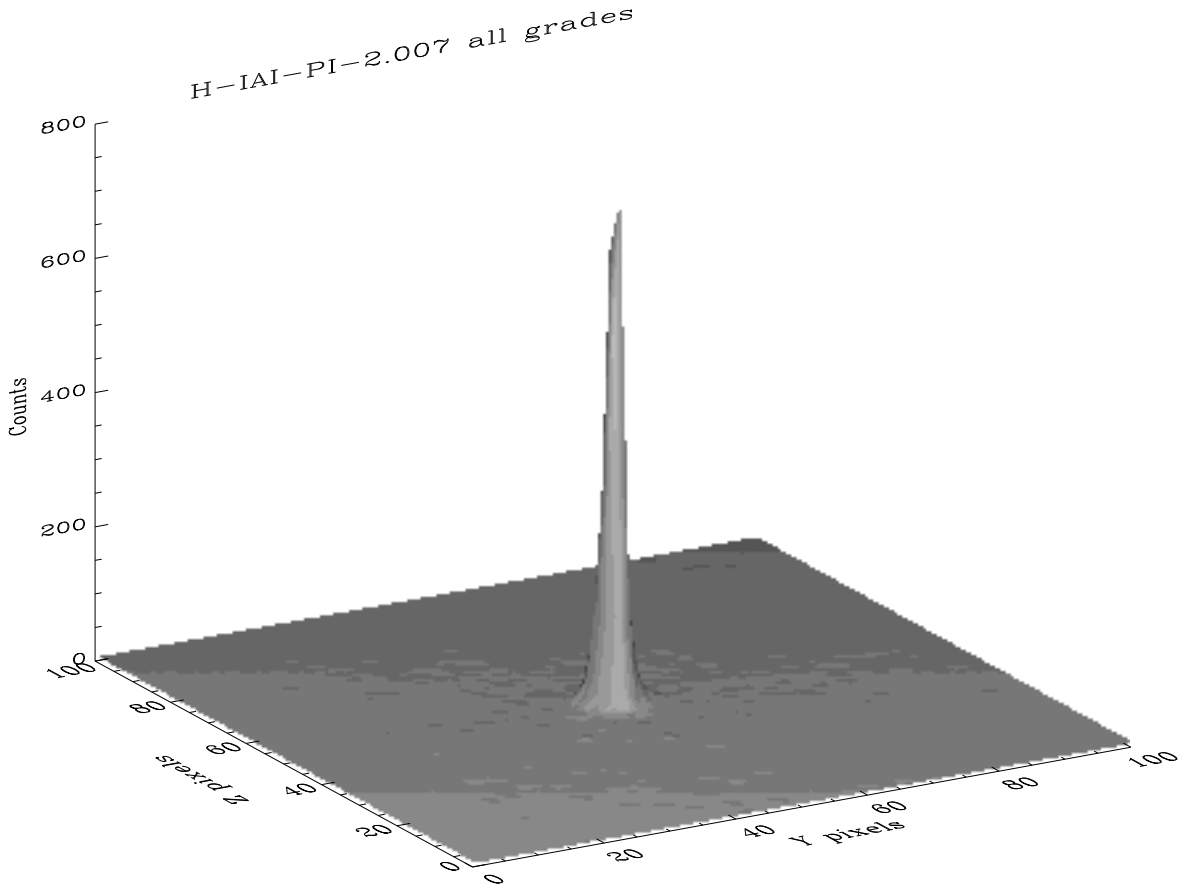
H-IAI-PI-2.007 all grades
Counts
800
600
400
200
0
Z pixels
100
80
60
40
20
0
0
20
40
60
80
100
Y pixels

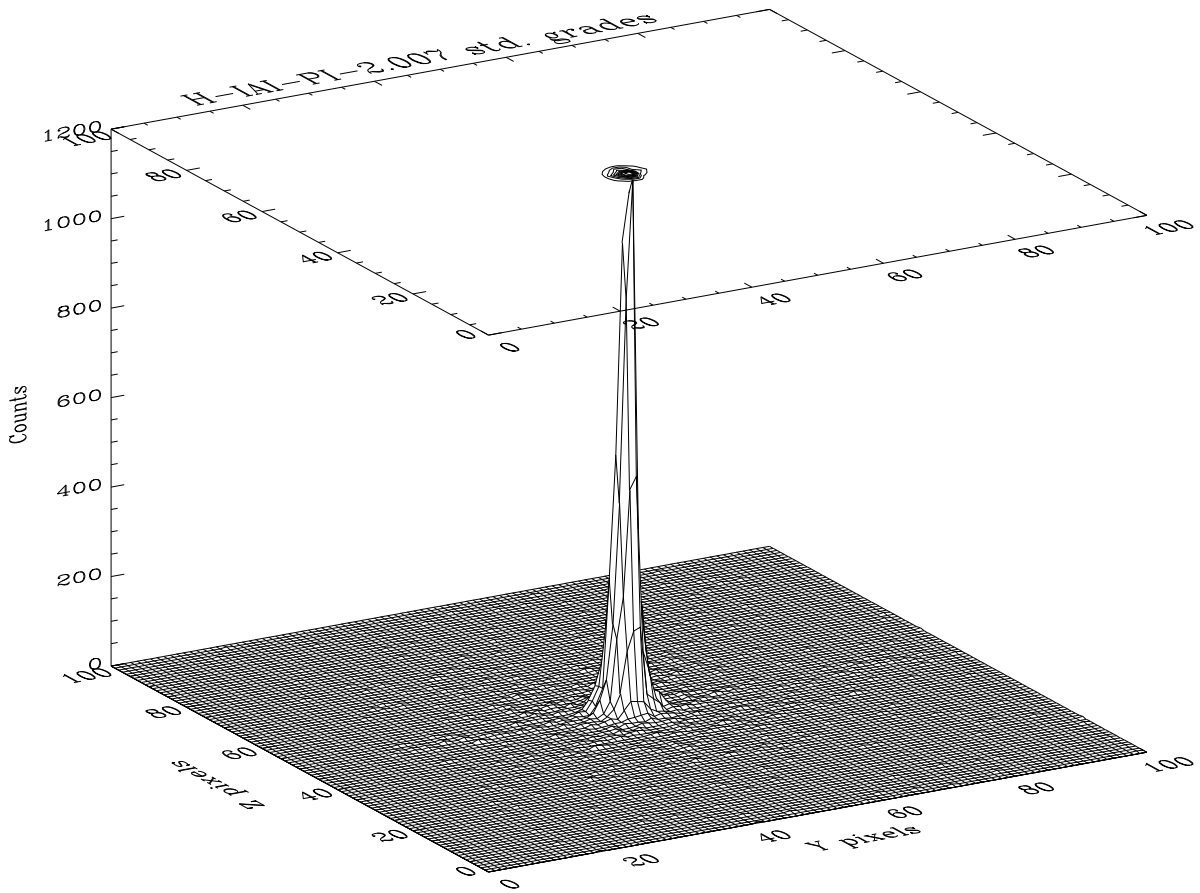
H-IAI-P1-2.007 std. grades
Counts
Z pixels
Y pixels
0
200
400
600
800
1000
1200
0
20
40
60
80
100

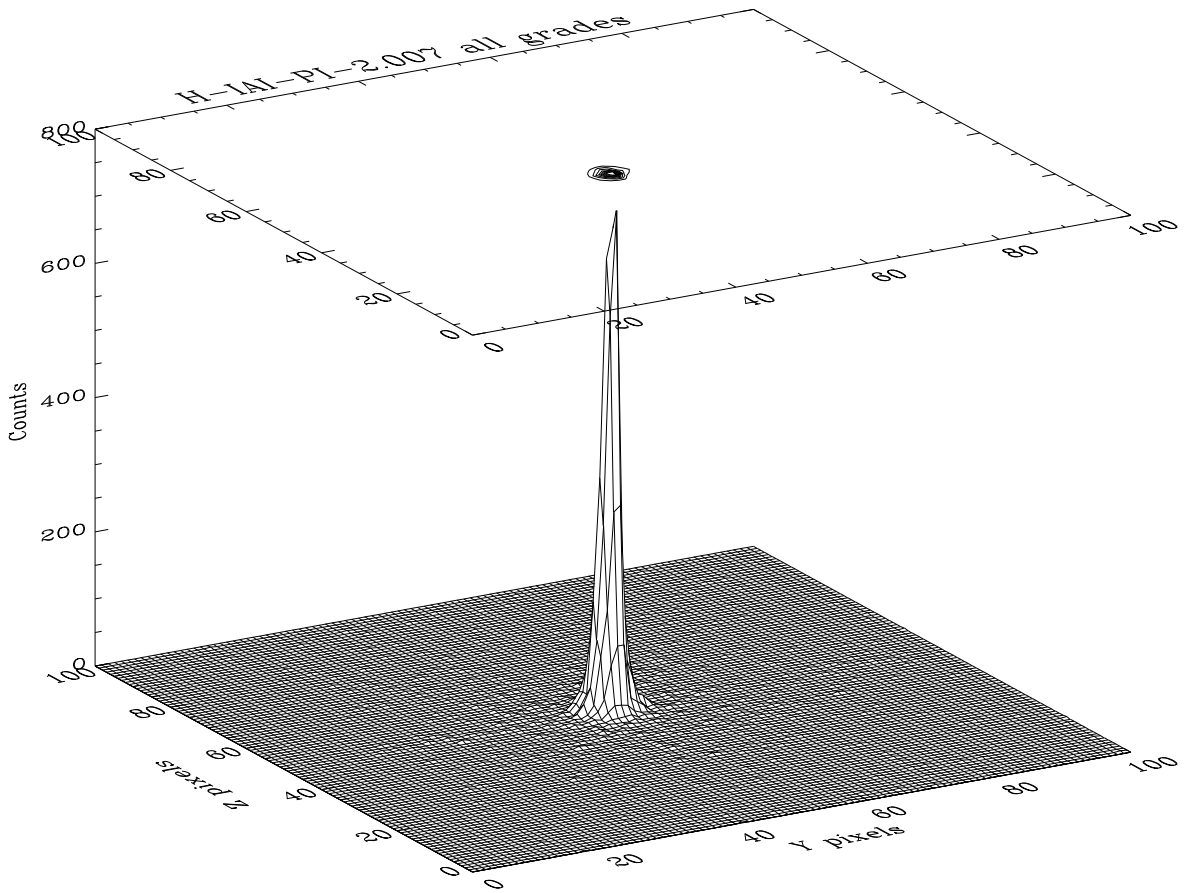
H-IAI-PI-2.007 all grades
Counts
Z pixels
Y pixels
0
200
400
600
800
0
20
40
60
80
100

Brightest pixel H-IAI-PI-2.007

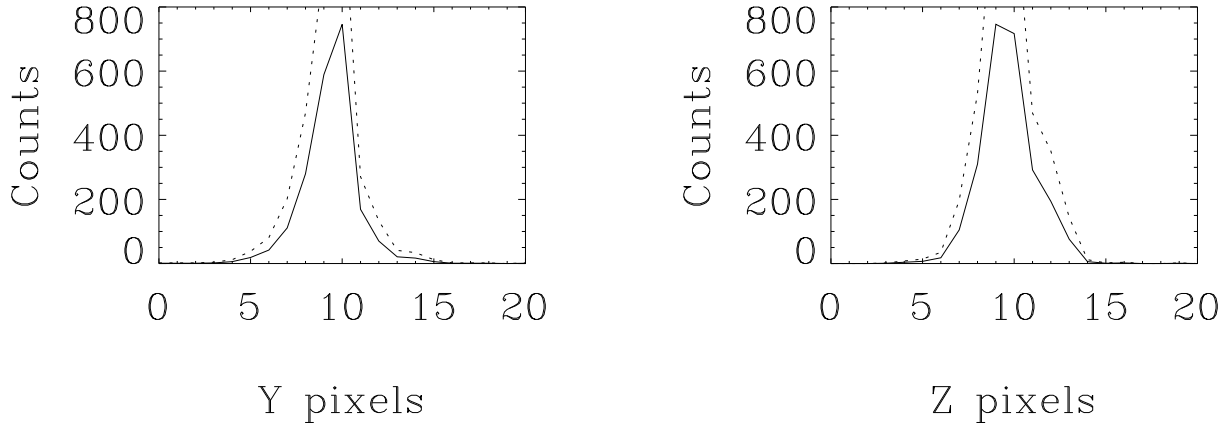

CM centroid H-IAI-PI-2.007

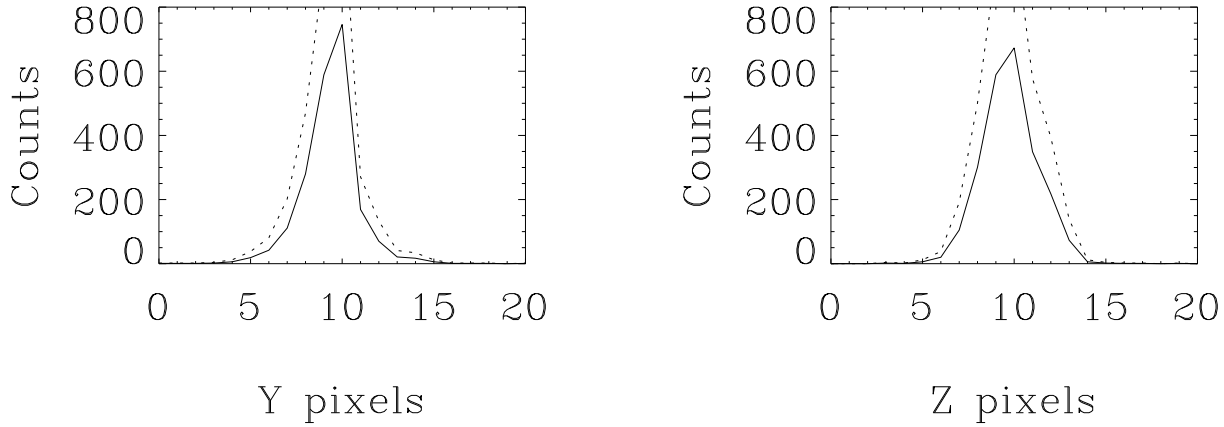

Solid lines: all grades, dotted lines: g=02346

Brightest pixel (Y,Z)
All grades 10 9
Std. grades 10 9

CM Centroid (Y,Z)
All grades 9.320659.73774
Std. grades 9.316149.75024

Brightest pixel maxima
All grades: 746.000
Std. grades: 1187.00

rightest pixel - All grades H-IAI-PI-2.007

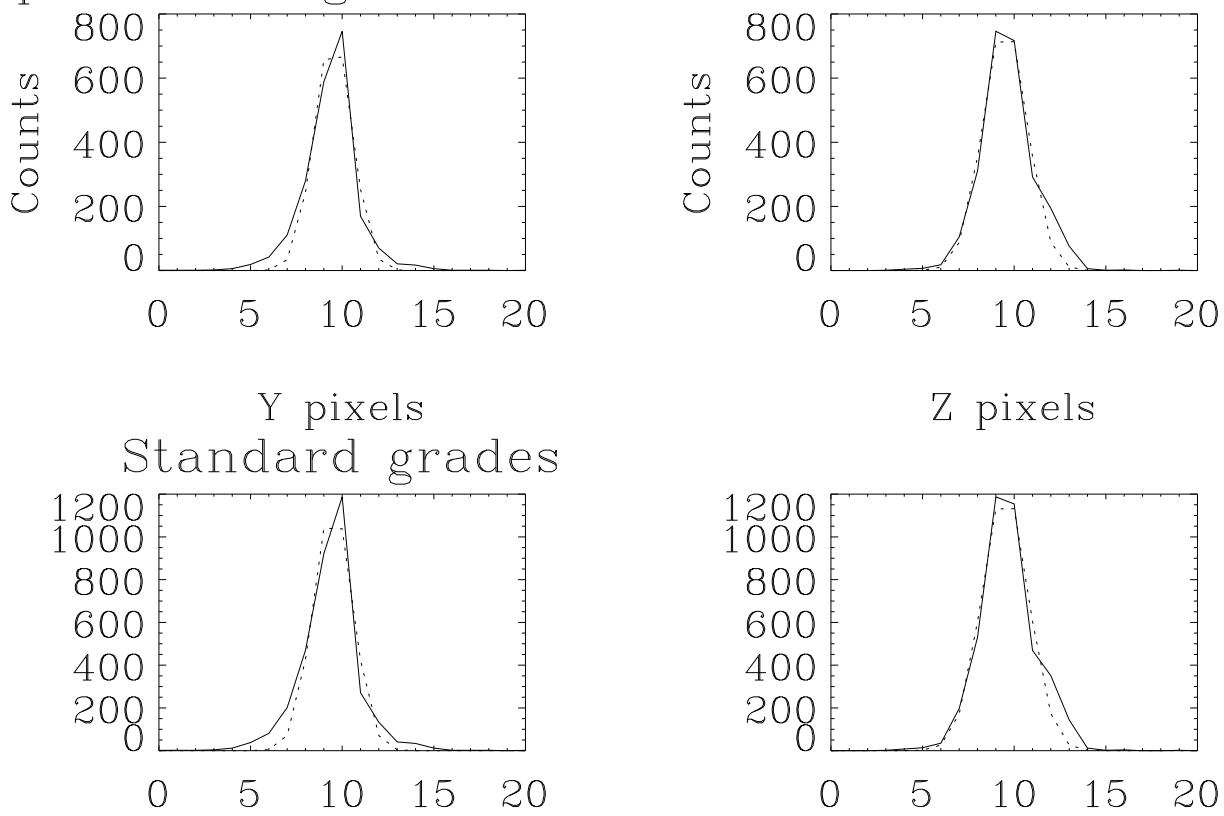

Total counts (area under gaussians, shown by dotted line)

	Integrated	Analytical
All Y	1875.5379	1893.2398
Std Y	3056.0182	3080.1404
All Z	2320.9251	2333.5419
Std Z	3856.9165	3873.9773

	amplitude	offset	sigma	FWHM
All Y:	747.96998	9.5134018	1.0097911	2.3770483
Std Y:	1161.9236	9.4966959	1.0575551	2.4894848
All Z:	778.03264	9.5031681	1.1965418	2.8166594
Std Z:	1223.5582	9.5017537	1.2631139	2.9733702